Revisions

Rev. N°	Date	Description	Paragr. Ref.

Instructions for assembly and wiring of ITH connectors

These assembly and wiring instructions refer to the ITH series connectors complying with NF F 61-030 standard and to reappraisal of circular connectors VG95234 for use on railways.

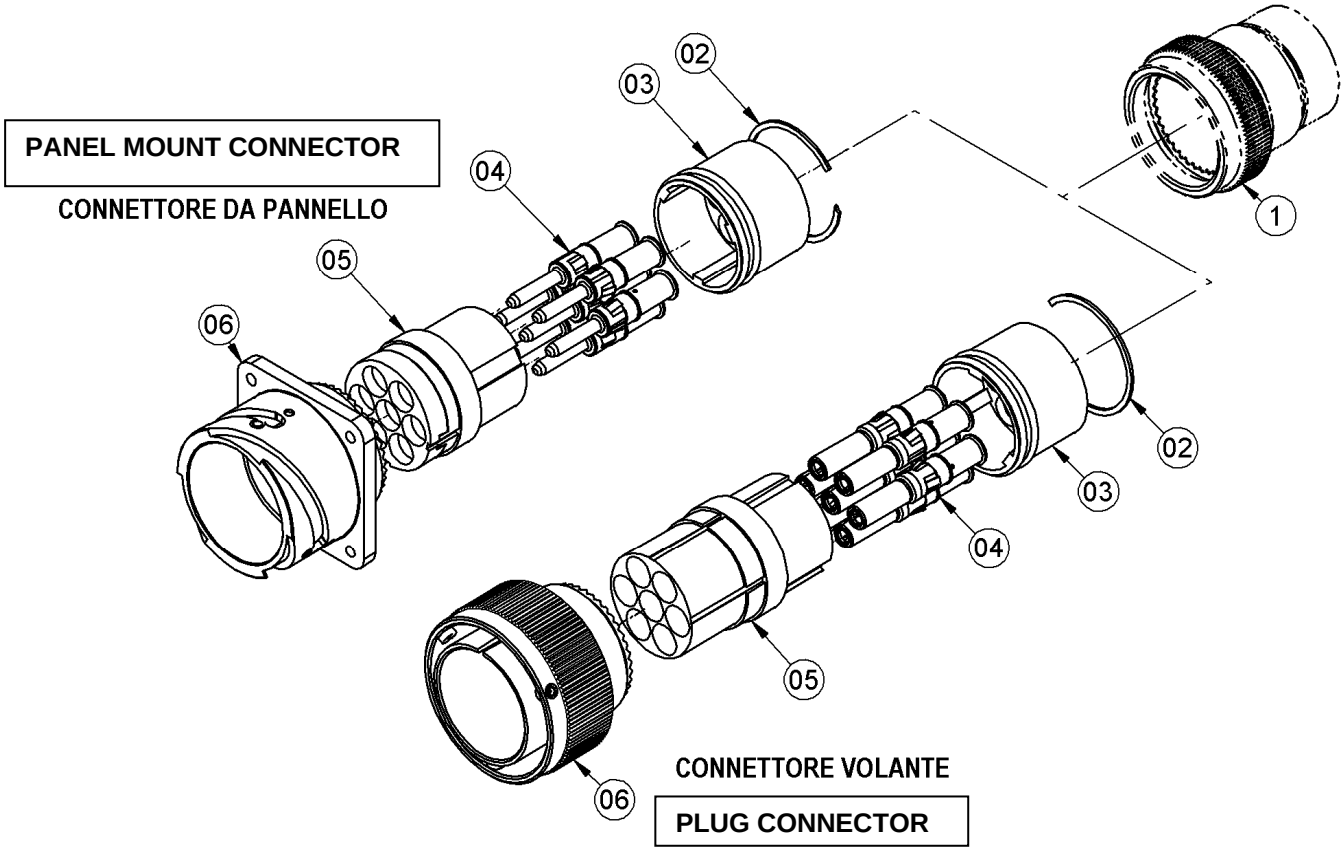

Description	No.
Termination unit (*)	01
Snap ring	02
Grommet	03
Contacts	04
Insert	05
Front unit	06

(*) = Components vary according to connector configuration

Revisions

Rev. N°	Date	Description	Paragr. Ref.

Exploded view of plug's front unit:

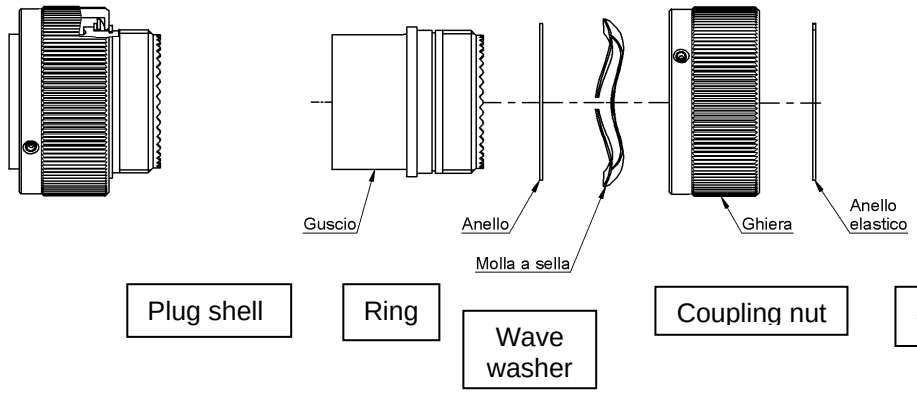

Plug shell | Ring | Wave washer | Coupling nut | Snap ring

(*) Components may change according to connectors configuration

1. Wiring procedure

Step 1.1: If a multicore cable is used, free the inner wires by removing a portion of the outer jacket as per Fig. 1 below. For the exact Ltot length, please refer to the specific configuration (see sections below).

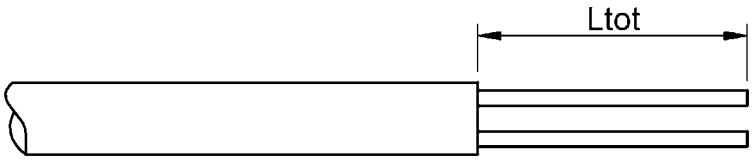

Fig. 1

Step 1.2: Install all connector components and accessories onto the cable. For component types and methods, please refer to the specific configuration (see sections below).

Step 1.3: Depending on the specific case, the plastic insert can be supplied separately or come already assembled in the front unit (

Fig. 2). The position of the insert allows customization of the rotation to avoid coupling errors in case of several adjacent connectors.

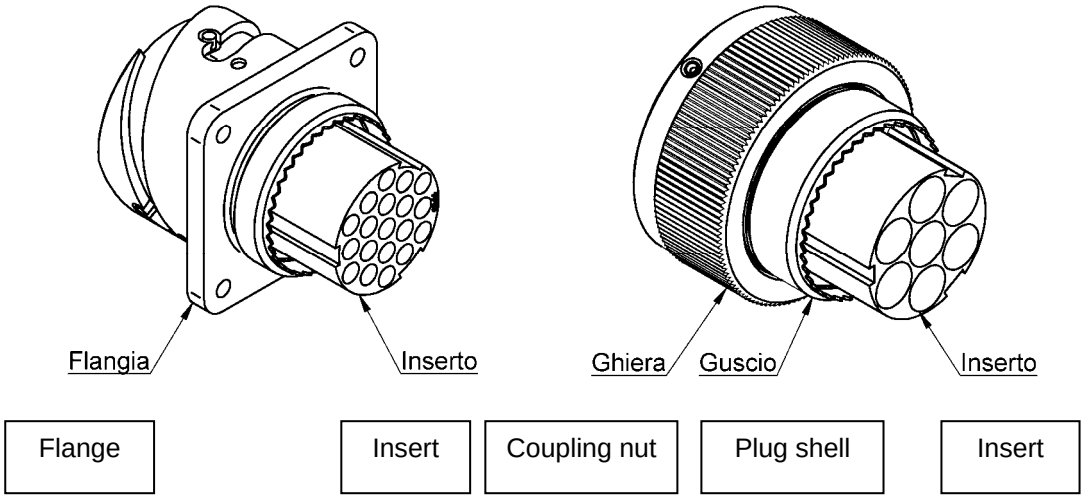

Fig. 2

Revisions

Rev. N°	Date	Description	Paragr. Ref.

The main phasing is given by the keys and keyways on the metal bodies. To define secondary phasing it is necessary to align one of the polarization notches of the plastic insert (

Fig. 3) with the inner key of the plug shell. In case of a mounted insert, it is possible to extract it by removing the snap ring using a narrow flat tip screwdriver (Fig. 4).

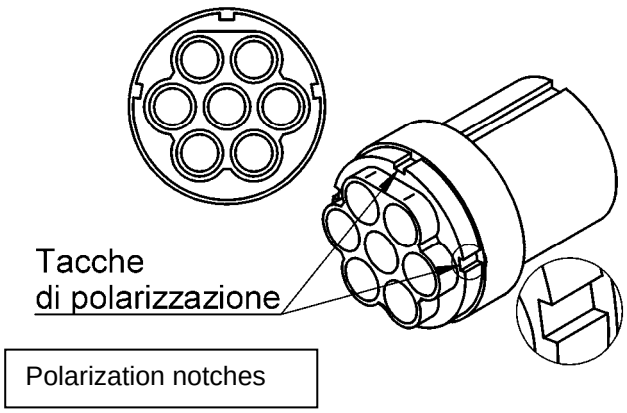

Fig. 3

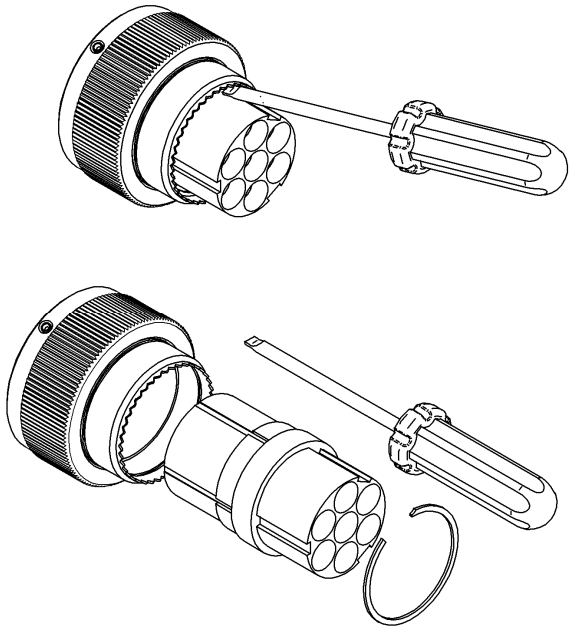

Fig. 4

Revisions

Rev. N°	Date	Description	Paragr. Ref.

Step 1.4: *METHOD I*

a) Position the grommet as indicated in Fig. 5 and thread the cables through the housings. The operation ideally consists of inserting the cables through the grommets before stripping and crimping and, subsequently, of terminating the contact, but it is also possible to insert the entire contact already crimped onto the cables by hand through the grommet.

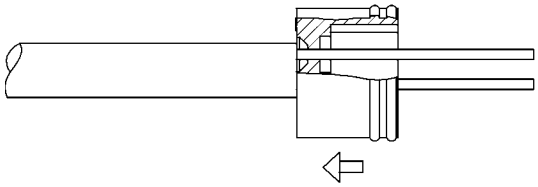

Fig. 5

b) Proceed depending on the operations effectuated prior to crimping and/or to population of contacts in the insert as indicated in the specific sections "Crimping of contacts" and "Insertion of contacts". For this method, the part regarding the use of insertion tools in the section "Insertion of contacts" should be ignored.

c) Slide the grommet along the wires until it is stops against the rear side of the insert. To ease sliding of the components, isopropyl alcohol can be used as lubricant. In this case, before using the connector ensure that there is no longer trace of alcohol.

NB: Passage through the grommet housing requires perforation of a thin membrane present in each housing.
If, during insertion of wires without contacts, problems due to the low rigidity of the cable are experienced, it is advisable to prior perforate the membrane with the tip of the male contact or with a blunt instrument that has no cutting edges.

Step 1.4 *METHOD II*

a) Mount the grommet onto the insert as indicated in Fig. 6.

b) Crimp or insert the contacts as indicated in the sections "Crimping of contacts" and "Insertion of contacts"".

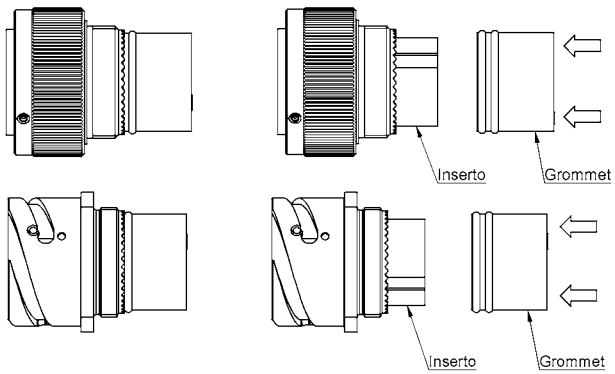

Fig. 6

IMPORTANT: The method II, allows to avoid the "sliding operation" of the grommet, in those cases where the high number of contacts/wires make this operation tough
Method II is less advisable in so far as it is more likely that insertion tools will need to be used in order to bring the contact into its housing. Adoption of this method requires a skilful operator, since the passage of the insertion tools through the grommet housings can lead to deformation of, or damage to, the latter.

Step 1.5: Strip the wires (Fig. 7) as per TAB. 1 and make sure not to damage or cut the cable strands.

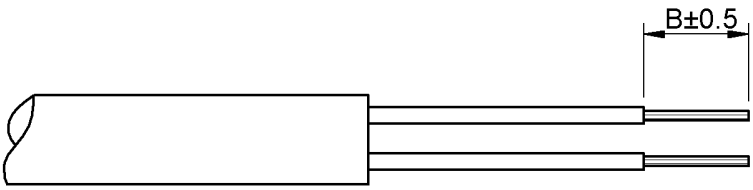

Fig. 7

TAB. 1

Contact size	B mm
20	5.5
16	7.9
12	9.9
8	12.2

Revisions

Rev. N°	Date	Description	Paragr. Ref.

2. Crimping of contacts

ITH contacts are characterized by the presence of mounting clips which, depending on the size, can have different dimensions and forms.

A) MALE CONTACTS

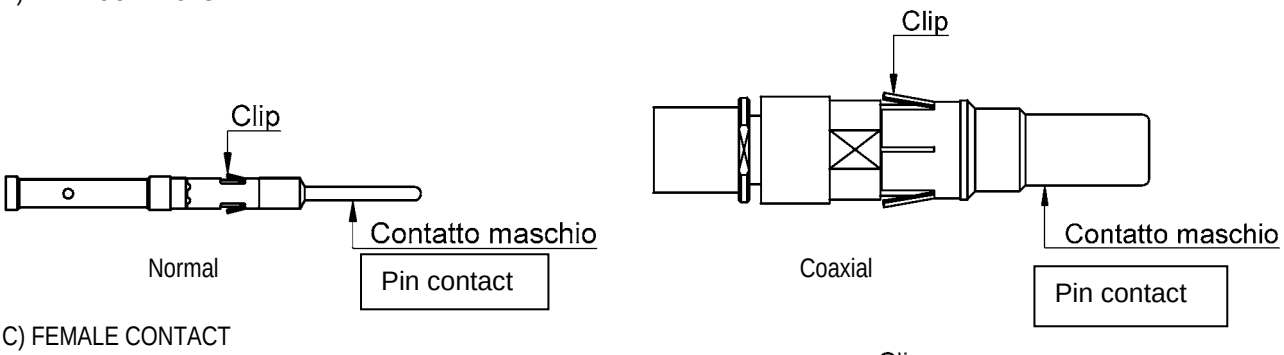

C) FEMALE CONTACT

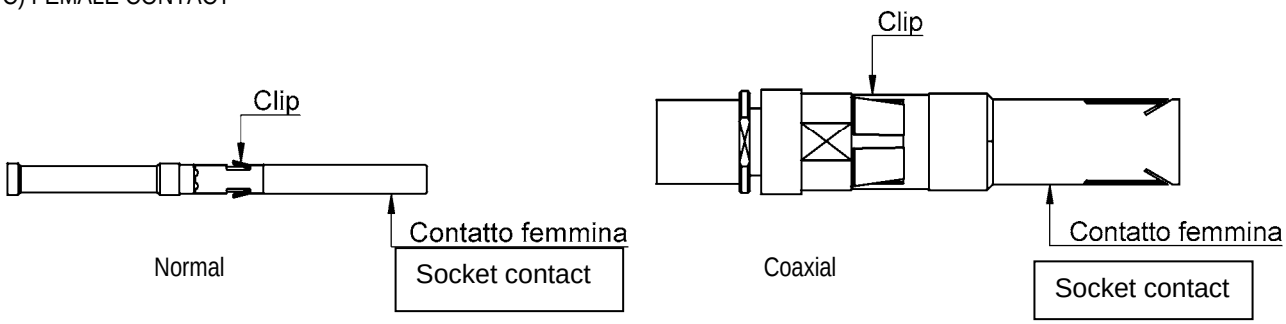

Step 2.1: Consult TAB.A and TAB.B at the end of this document to check the suitability of the contacts with the cable and to identify the tools required for crimping.

Step 2.2: Install the turret on the crimping tool and then the positioner, as shown in Fig. 8. Set the crimping depth using the selector.

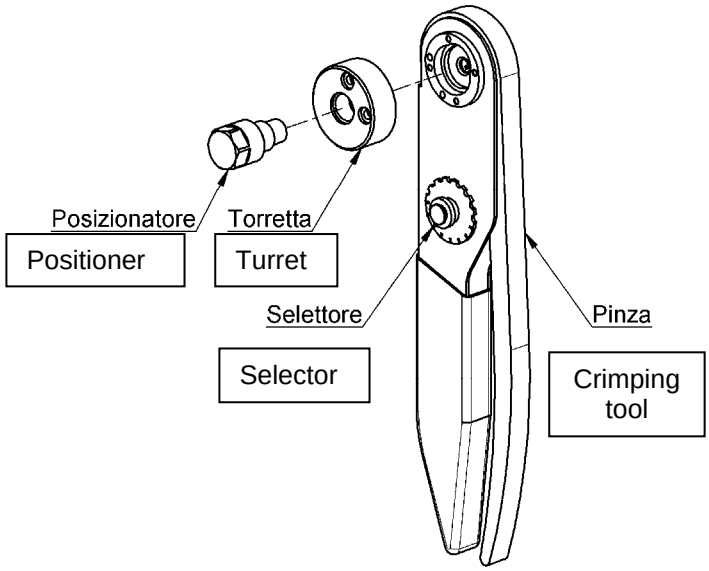

Fig. 8

Revisions

Rev. N°	Date	Description	Paragr. Ref.

Step 2.3: Insert the contact in the opened crimping tool, until it is stops, (Fig. 9), then lock it by gently closing the handles, thus avoiding warping.

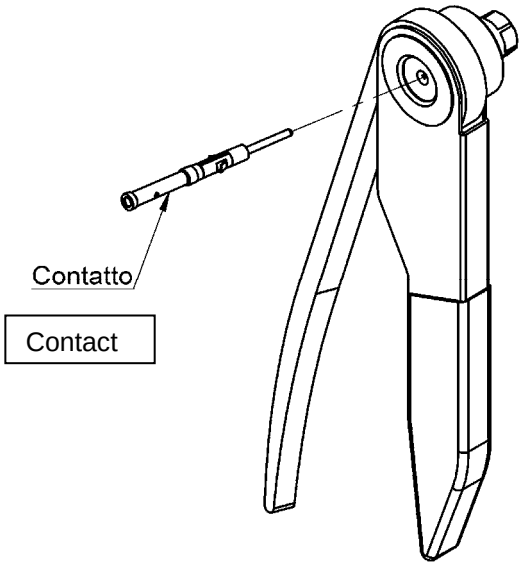

Fig. 9

Step 2.4: Insert the conductor into the contact hole (Fig. 10), being careful that no wires or loose strands of wire are visible (Fig. 11). Correct crimping requires verification of the presence of the conductor through the inspection hole (
Fig. 12).

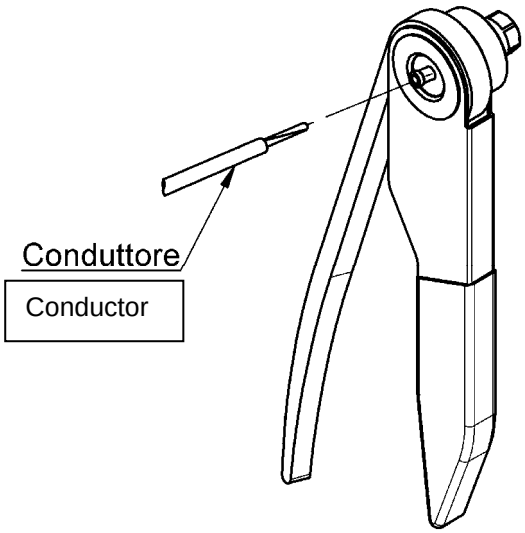

Fig. 10

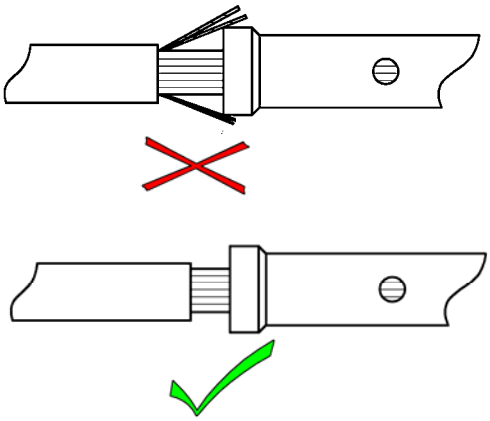

Fig. 11

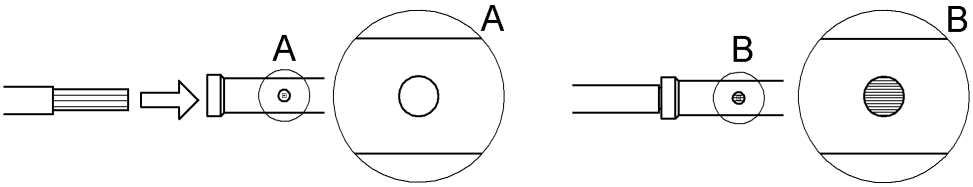

Fig. 12

Step 2.5: Fully tighten the pliers to perform crimping (Fig. 13). Visually check that the deformation has equally involved the entire crimping area of the contact and that there are no breakages and/or cracks (Fig. 14).

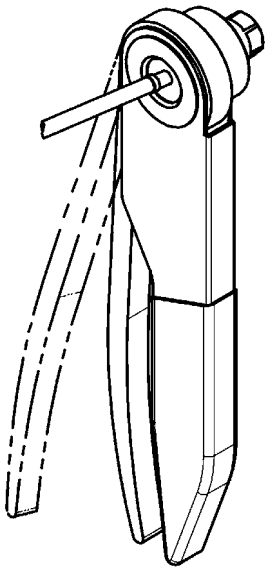

Fig. 13

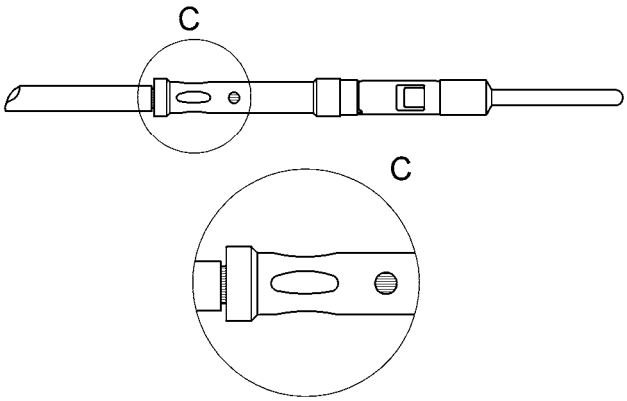

Fig. 14

Revisions

Rev. N°	Date	Description	Paragr. Ref.

3. Insertion of contacts

Step 3.1: Insertion of ITH contacts should preferably always be by hand with the exclusive aid of the cable and by inserting the contact from the rear side. When a cable's lack of rigidity prevents its movement,, use TAB.A and TAB.B to identify the correct insertion tool and proceed as follows:
Move the contact until it is stops against the crimp bucket in the insertion tool indicated in TAB.A and TAB.B and insert it from the rear side of the insert with a slow movement that is as linear and uniform as possible (Fig. 15). Insertion must be achieved by keeping the contact as aligned as possible with its housing. To facilitate the sliding of components, isopropyl alcohol can be used as a lubricant (*).

** In this case, before using the connector ensure that there is no longer trace of alcohol.*

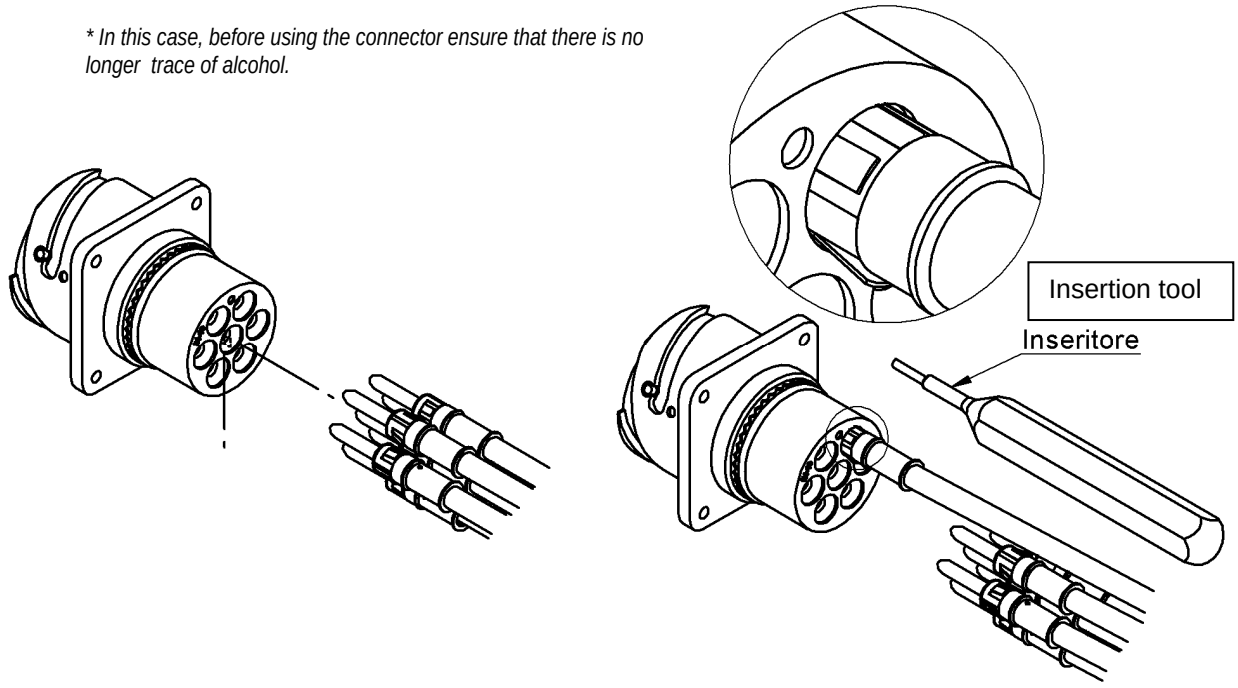

Fig. 15

Step 3.2: Complete the insertion operation by pushing the contact to the point of abutment until the click of the locking clip can be heard (Fig. 16). At this point, without the appropriate extractors it is no longer possible to remove the contact even by exerting pressure from the front part (an operation which, in any event, is recommended in order to check the correct positioning of the contact itself).

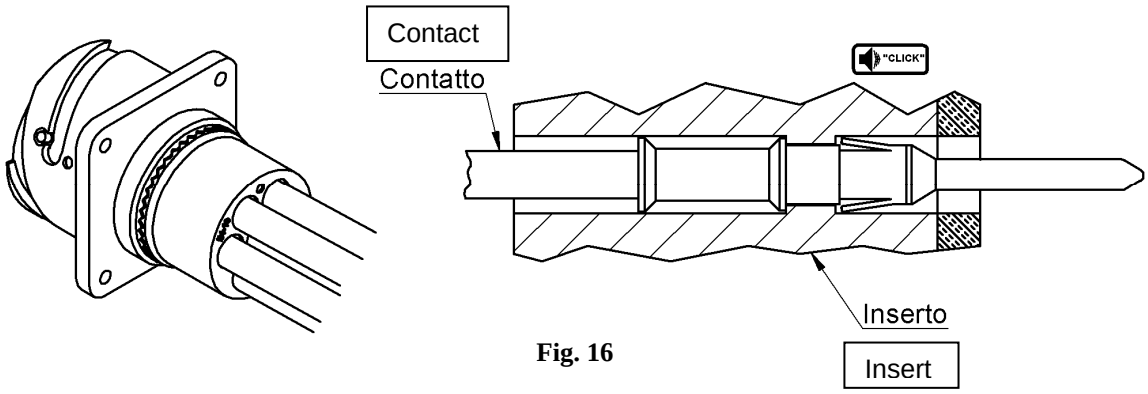

Fig. 16

Revisions

Rev. N°	Date	Description	Paragr. Ref.

The correct housing of contacts can be checked using the dimensions given below.

Receptacle connector

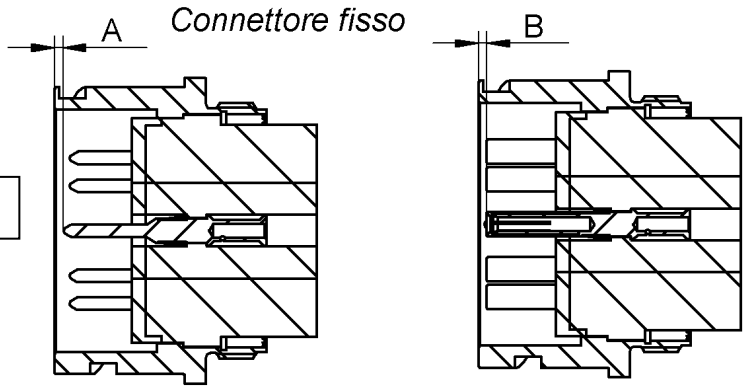

Plug connector

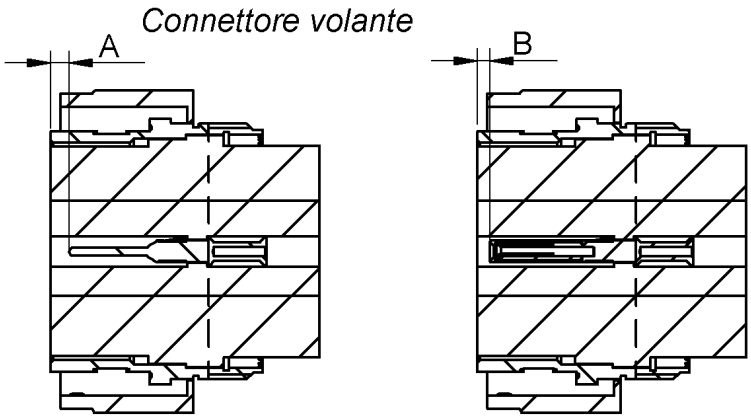

Connector size	***A ± 0.5 mm***				***B±0.5 mm***			
	Male contact size				***Female contact size***			
	8	***12***	***16***	***20***	***8***	***12***	***16***	***20***
18	/		6.7	/	/	/	2.7	/
20	/	2.8	/	/	/	2.8	/	/
22	/		6.4	/	/		2.7	/
24	1	4	/	8.9	3		/	2.4
28	/		5.4	/	/		2.6	/
32	/	2	/	/	/	2.8	/	/
36	/	1.8	/	/	/		/	/
40	/		/	/	/		2.7	/

Revisions

Rev. N°	Date	Description	Paragr. Ref.

4. Assembly of accessories

Step 4.1: Screw the backshell onto the rear thread of the front unit (Fig. 17 and Fig. 18) being careful not to damage materials or galvanic coatings. To make mounting easier, it is recommended to lock the flange or shell firmly (the latter can be coupled to the flange using it as a bracket support). It is recommended to observe the tightening torques given in TAB.3.

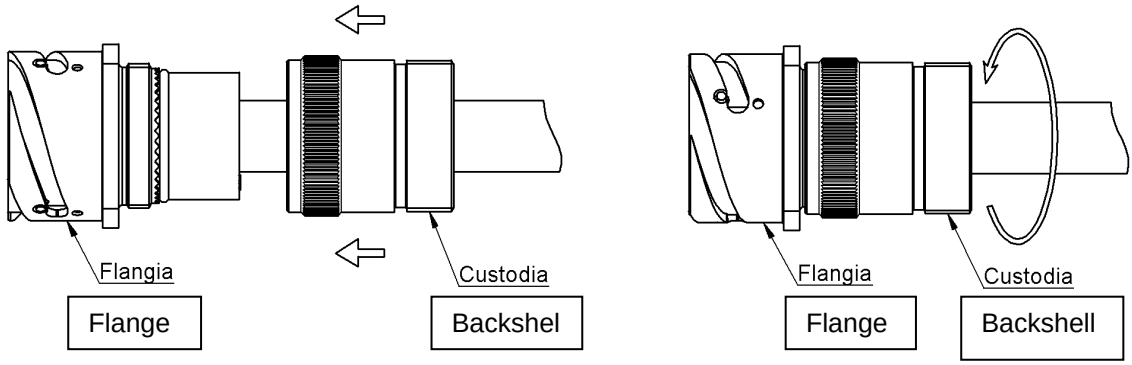

Fig. 17

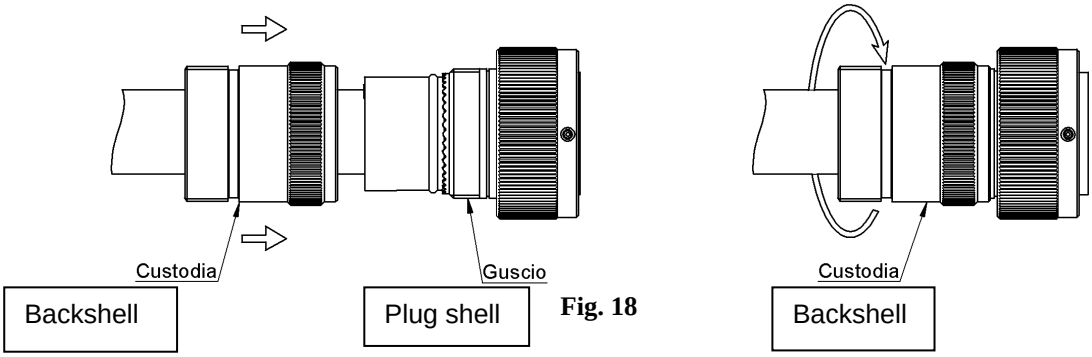

Fig. 18

TAB. 3

Connector size	MAX. tightening torque (Nm)
18	8
20	9
22	10.5
24	12.5
28	16.5
32	18
36	23.5
40	27

To avoid damage to finishings, use pliers or torque wrenches with jaws coated with anti-scratch material.

Step 4.2: Assemble the remaining components according to the indications given in the sections dedicated to specific configurations.

Revisions

Rev. N°	Date	Description	Paragr. Ref.

5. Removal of contacts

Step 5.1: Disassemble any accessories present until the rear grommet is visible. Move it away from the insert by sliding it along the cables (Fig. 19). To facilitate sliding, isopropyl alcohol can be used as a lubricant.

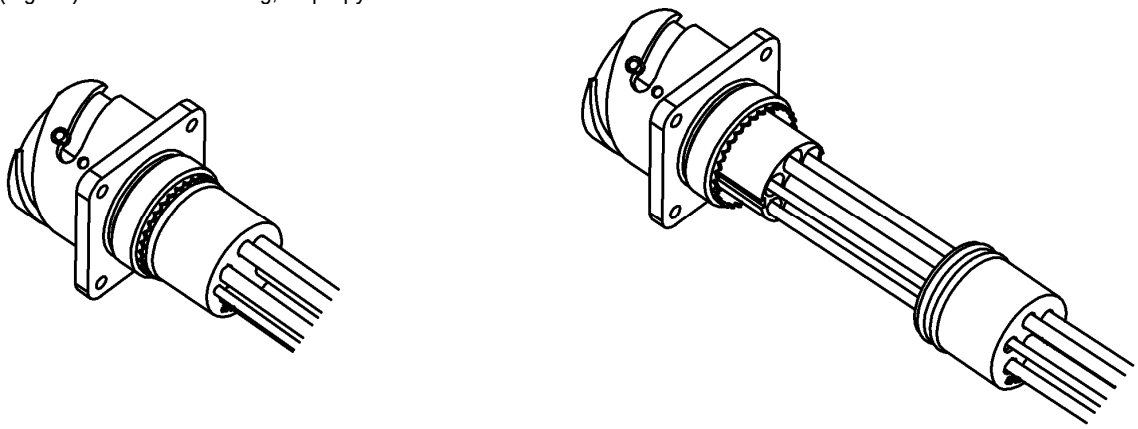

Fig. 19

Step 5.2: Choose the right removal tool by referring to TAB.A and TAB.B.

There are two types of removal tool:

- Soft extractor:

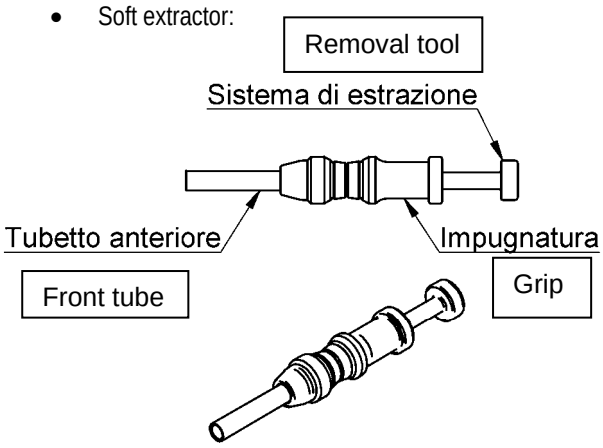

- Elegance extractor:

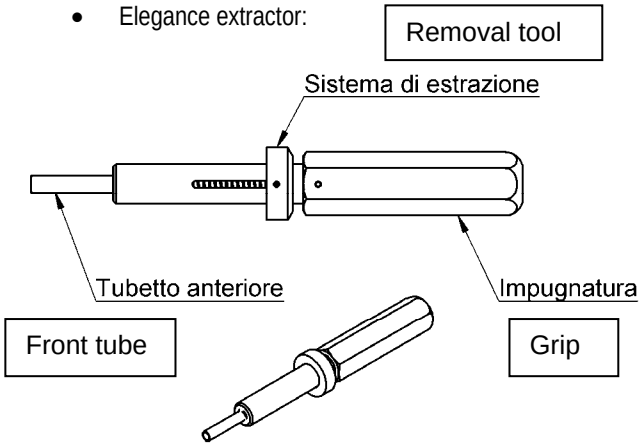

Step 5.3: Insert the front tube of the extractor from the front side of the plastic insert (some inserts may have a front rubber gasket) until it is stops. In this way the clip petals become closed (Fig. 20, Fig. 21 and Fig. 22).

Revisions

Rev. N°	Date	Description	Paragr. Ref.

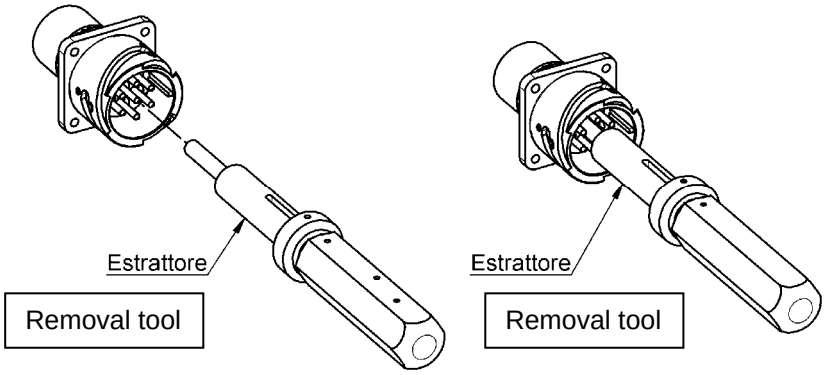

Fig. 20

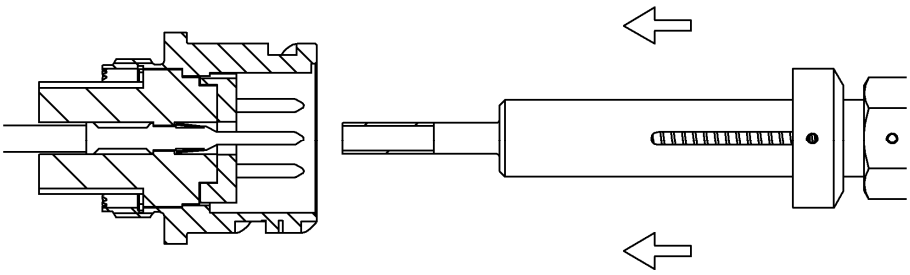

Fig. 21

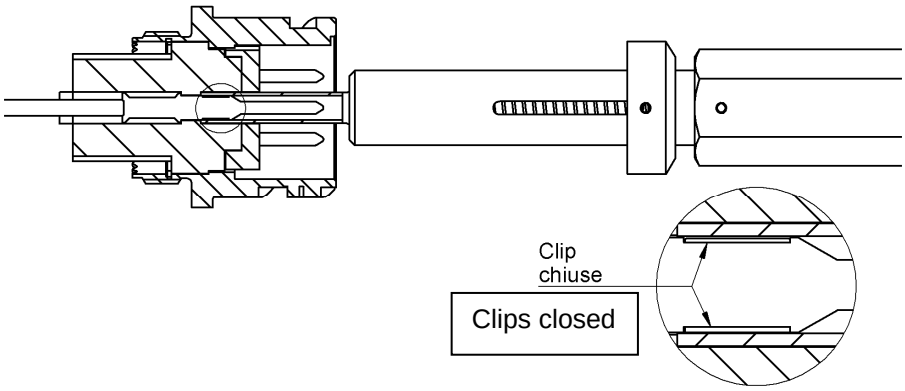

Fig. 22

Revisions

Rev. N°	Date	Description	Paragr. Ref.

Step 5.4: Keeping the insert and the extractor firm, act upon the removal system in a forward direction until the contact comes out (Fig. 23)

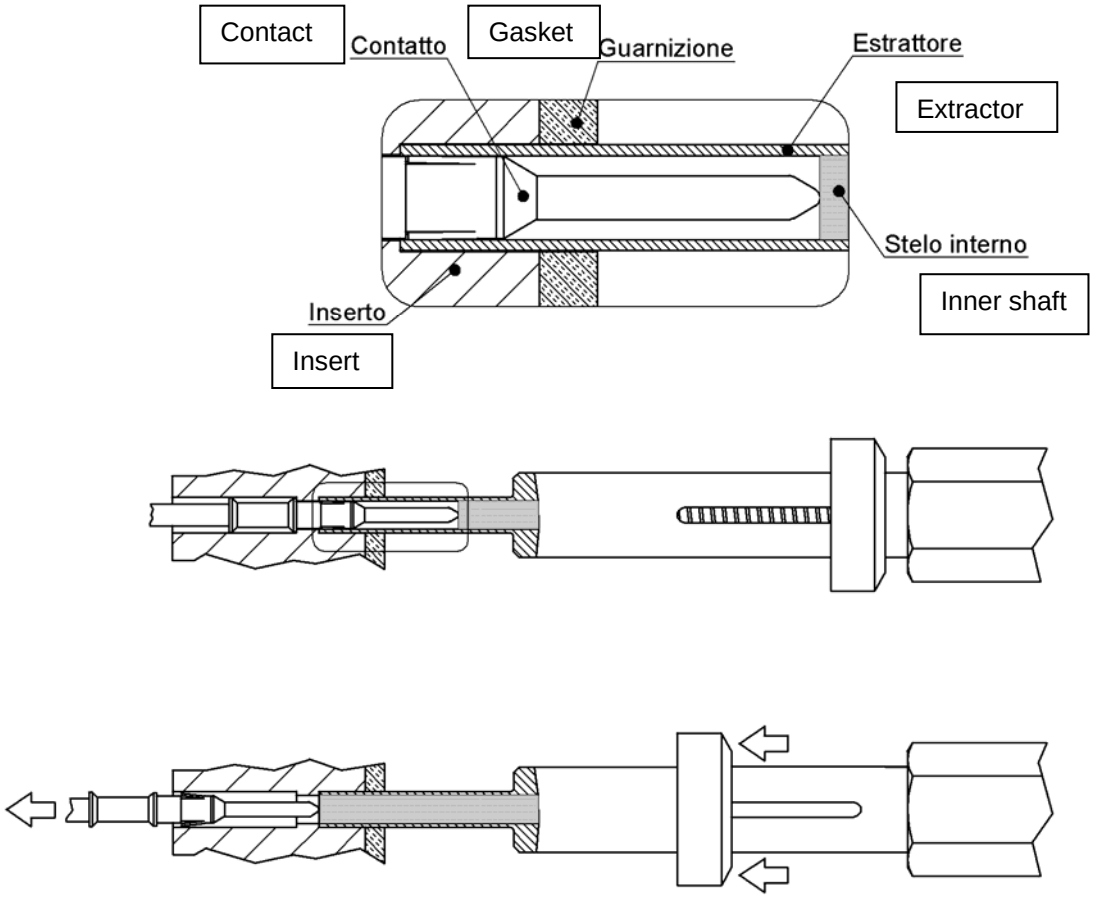

Fig. 23

Revisions

Rev. N°	Date	Description	Paragr. Ref.

Step 5.5: Reuse the extractor by inserting the contact into the front tube until the clip petals close again. Then pass the contact through the grommet's seat. (Fig. 24)

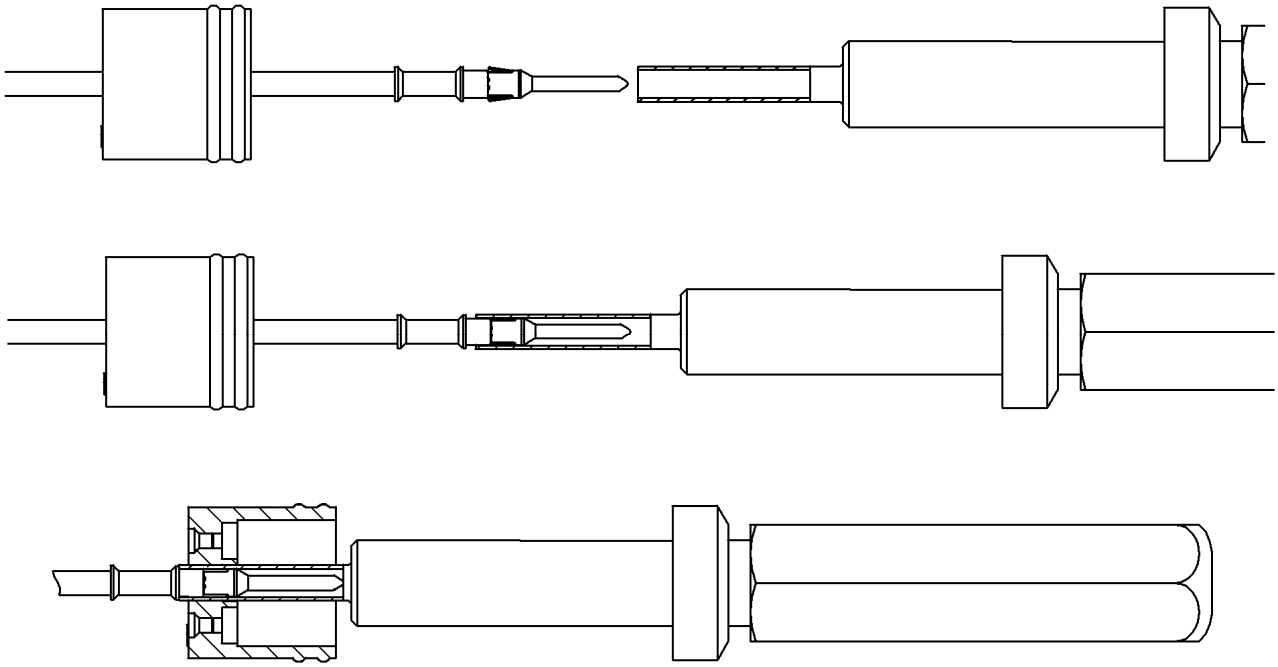

Fig. 24

Step 5.4: Remove the contact from the extractor.

Revisions

Rev. N°	Date	Description	Paragr. Ref.

6. Specific configurations

6.1 Connector with type A backshell

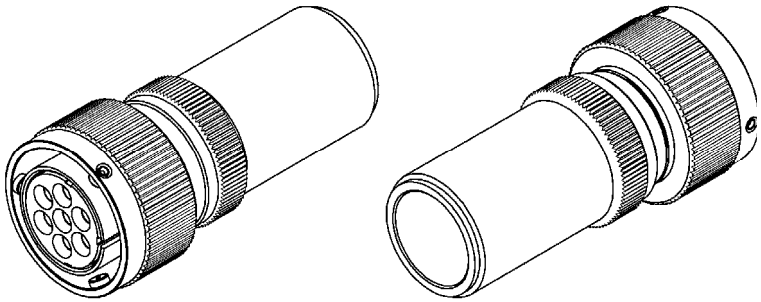

Screw the backshell onto the front unit following the indications given in section 4.

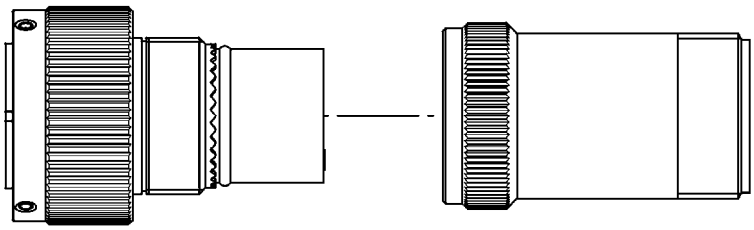

The stripping length Ltot indicated in section 1 ('Wiring procedure') is given in the following table:

Contact size	Ltot mm min.
8	86
12	83
16	81
20	71

The figures in the table are indicative (and so can be customized) in so far as they are dependent on factors such as the number of contacts/wires, type of cable, availability of wiring tools, skills etc.

Revisions

Rev. N°	Date	Description	Paragr. Ref.

TAB. A

TOOLS FOR MALE CRIMP CONTACTS

CONTACT SIZE	PART NUMBER	WIRE CROSS SECTION								
		mm²	AWG	MANUAL CRIMPING		PNEUMATIC CRIMPING		INSERTION TOOL	REMOVAL TOOL	
				TOOL	TURRET POSITIONER	TOOL	DIE		SOFT	ELEGANCE
20	PL 570-20	0.15÷0.6	26÷20	M.105001	M.105012	/		M.104014	M.104013	M.104013/E
16	PL 40557	1.5	16		M.104000			M.104006	M.104003	M.104003/E
	PL 40557-12	0.5÷0.75	20							
	PL 40557-13	0.15÷0.6	26÷20							
	PL 40557-15	1	18							
	PL 40557-20	2	14							
	PL 40557-26	2.5÷3.5	12							
12	PL 40561	2.5÷3.5	12	M.105028	M.104001			M.104007	M.104004	M.104004/E
	PL 40561-12	0.5÷0.75	20	M.105001						
	PL 40561-15	1	18							
	PL 40561-20	1÷2	18÷14	M.105028						
	PL 40561-30	4								
8	PL 40792	6÷8	8		M.104002			M.104008	M.104005	M.104005/E
	PL 40792-30	4								
	PL 40792-38	6				M.112000	M.112001			
	PL 40792-50	10								

TOOLS FOR MALE COAXIAL CONTACT

Coaxial contact size 8	Pliers:	M.22520.5.01

Revisions

Rev. N°	Date	Description	Paragr. Ref.

TAB. B

TOOLS FOR FEMALE CRIMP CONTACTS

CONTACT SIZE	PART NUMBER	WIRE CROSS SECTION								
		mm²	***AWG***	***MANUAL CRIMPING***		***PNEUMATIC CRIMPING***		***INSERTION TOOL***	***REMOVAL TOOL***	
				TOOL	***TURRET POSITIONER***	***TOOL***	***DIE***		***SOFT***	***ELEGANCE***
20	PL 40520	0.15÷0.6	26÷20	M.105001	M.105012	/		M.104014	M.104013	M.104013/E
16	PL 40556	1.5	16		M.104000			M.104006	M.104003	M.104003/E
	PL 40556-12	0.5÷0.75	20							
	PL 40556-13	0.15÷0.6	26÷20							
	PL 40556-15	1	18							
	PL 40556-20	2	14							
	PL 40556-26	2.5÷3.5	12							
12	PL 40560	2.5÷3.5	12	M.105028	M.104001			M.104007	M.104004	M.104004/E
	PL 40560-12	0.5÷0.75	20	M.105001						
	PL 40560-15	1	18							
	PL 40560-20	1÷2	18÷14	M.105028						
	PL 40560-30	4								
8	PL 40793	6÷8	8					M.104008	M.104005	M.104005/E
	PL 40793-30	4								
	PL 40793-38	6		M.105028	M.104002	M.112000				
	PL 40793-50	10		/	/					

TOOLS FOR FEMALE COAXIAL CONTACT		
Coaxial contact size 8	Pliers:	M.22520.5.01